SOLATUBE 21-C
CURB-MOUNT FLASHING
HARD CEILING
W/ DAYLIGHT DIMMER

REVISIONS				
ECO	REV.	DESCRIPTION	DATE	INC.
1314	B	TITLE CHANGE	12/4/2006	CS
	C	ADJUSTED FLASHING DIMENSION CALLOUT	10/30/2007	CS
	D	MODIFIED REFLECTOR CALLOOUT AND ADDED "CAP" TO DIMENSION IN TOP VIEW	2/21/2008	CS

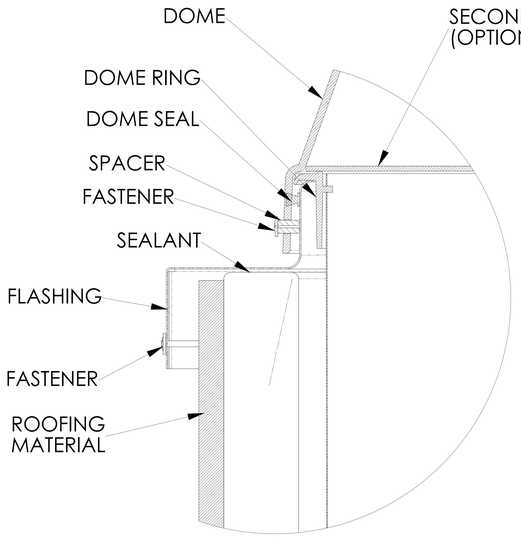

DETAIL A
SCALE 3 : 1

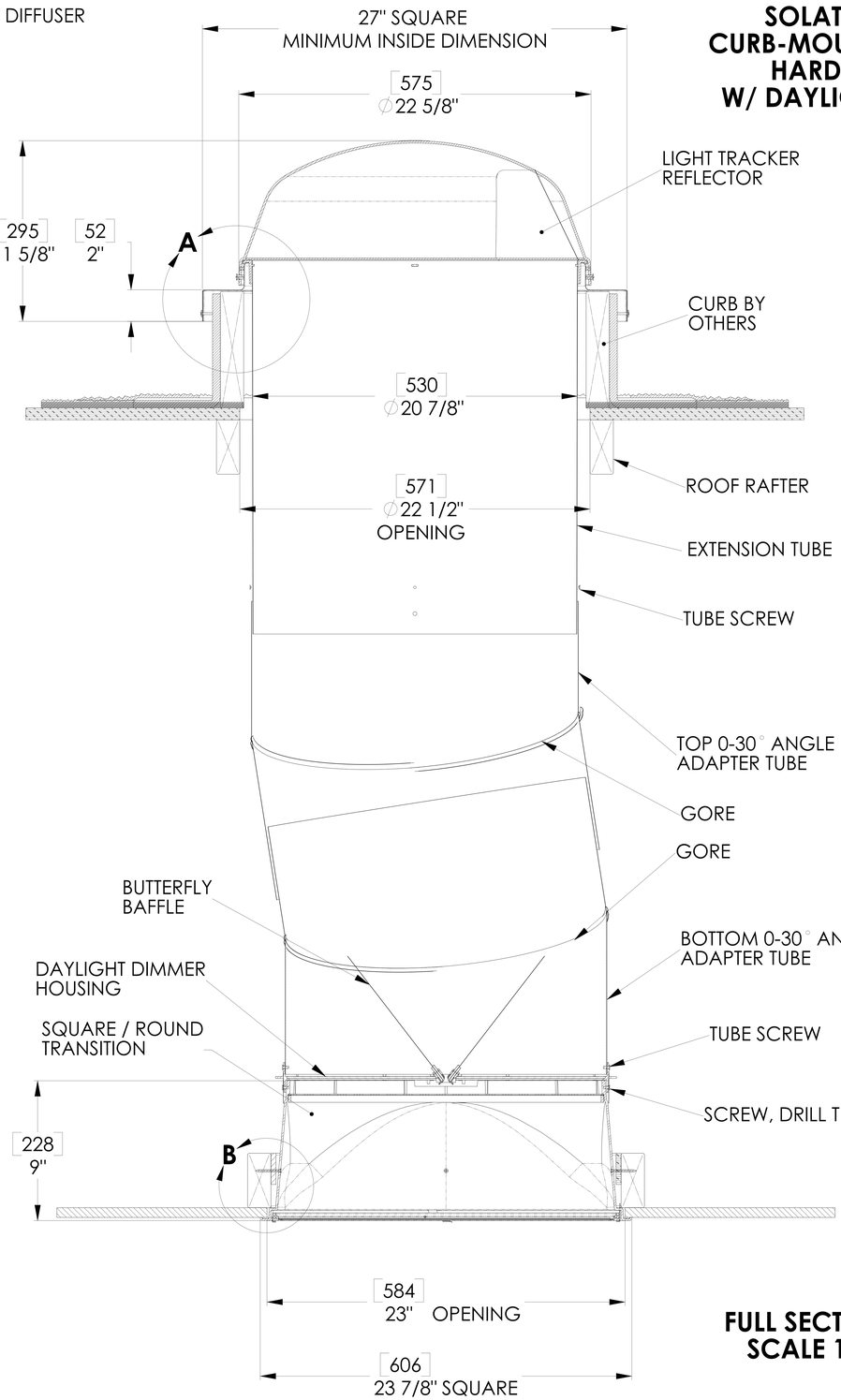

FULL SECTION
SCALE 1:1

NOTES:

1. DIMENSIONS IN BRACKETS ARE METRIC UNLESS OTHERWISE SPECIFIED.
2. 6" MIN. CLEARANCE SHOULD BE MAINTAINED FROM ALL SOLATUBE COMPONENTS AND OTHER PLENUM ELEMENTS.

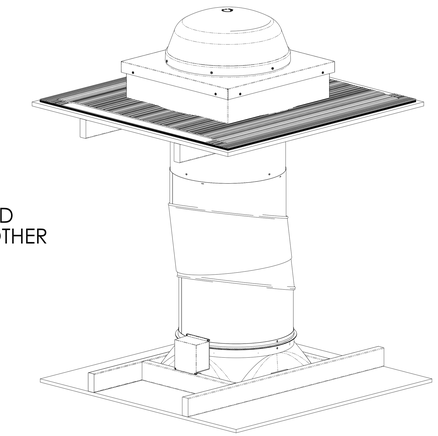

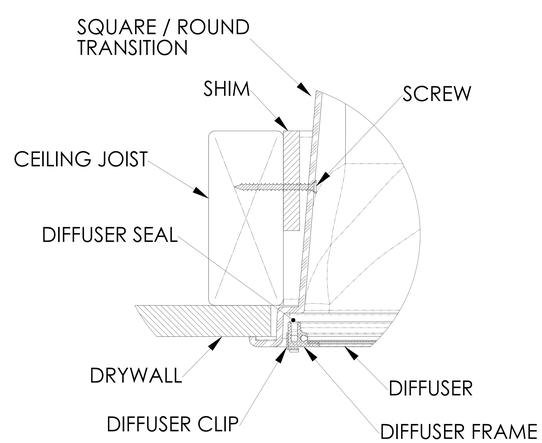

DETAIL B
SCALE 3 : 1

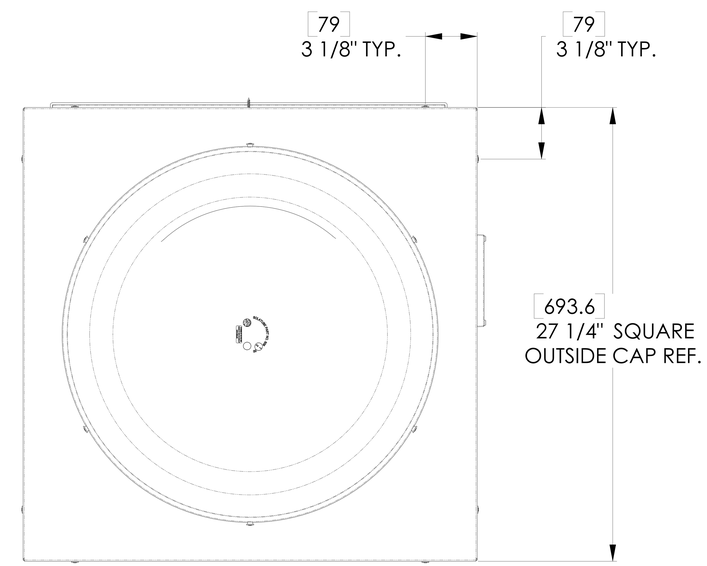

TOP VIEW
SCALE 1:1

UNLESS OTHERWISE SPECIFIED:
DIMENSIONS ARE IN INCHES
TOLERANCES:
ANGULAR: ±0.5°
.X ± .1
.XX ± .06

MATERIAL
--
--

FINISH
--

DO NOT SCALE DRAWING

SOLATUBE INTERNATIONAL, INC.
COPYRIGHT 2002
WWW.SOLATUBE.COM

DRAWN BY: STEVENS — DATE: 2/23/04
CHECKED BY: -- — DATE: --
APPROVED BY: -- — DATE: --

SOLATUBE
2210 OAK RIDGE WAY
VISTA, CALIFORNIA 92081-8341
PH (760) 597-4400

TITLE: **21-C CURB-MOUNT FLASHING HARD CEILING W/ DD**

SIZE: **D** — DWG. NO. **21-CF-HC-DD** — REV **D**

SCALE: 1:1 — SHEET 1 OF 1